Trench MOS Barrier Schottky Rectifier

TSP5S150SP

TO-277

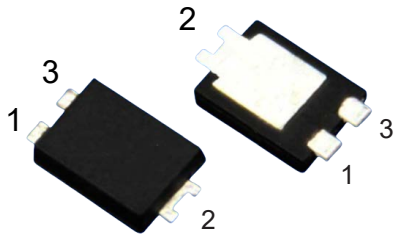

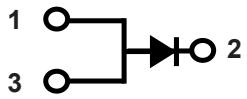

Features

- Advanced trench technology
- Low forward voltage drop
- Low power losses
- High efficiency operation
- Lead Free Finish, RoHS Compliant

Applications

- DC/DC Converters
- AC/DC Adaptors
- Switching Power Supplies
- Freewheeling Diodes

Maximum ratings and electrical characteristics (TJ = 25°C unless otherwise noted)

Parameter			Symbol	Limit		Unit
Maximum repetitive peak reverse voltage			VRRM	150		V
Maximum average forward rectified current			IF(AV)	5		A
Peak forward surge current 8.3 ms single half sine- wave superimposed on rated load per diode			IFSM	120		A
Operating junction and storage temperature range			T_J, T_{STG}	-50 to +150		°C
Typical thermal resistance per leg			$R_{\Theta JC}$	72		°C/W
				TYP.	MAX.	
Instantaneous forward voltage per diode	IF=1A	TJ=25°C	VF(1)	0.51	0.56	V
	IF=1A	TJ=125°C		0.46	-	
	IF=5A	TJ=25°C		0.89	0.95	
	IF=5A	TJ=125°C		0.82	-	
Instantaneous reverse current per diode at rated reverse voltage		TJ=25°C	IR(2)	1	100	uA
		TJ=125°C		-	10	mA

Notes:

(1) Pulse test: 300 μs pulse width, 1 % duty cycle

(2) Pulse test: Pulse width ≦ 40 ms

WORLD

Ratings And Characteristics Curves (TA = 25 °C unless otherwise noted)

FIG.1-Current Derating, Case

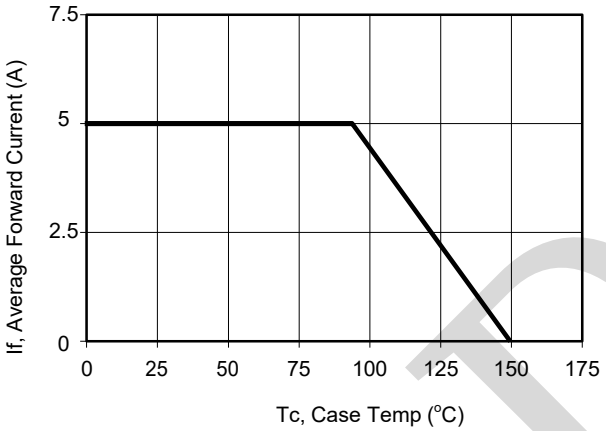

FIG.2-Maximum Repetitive Surge Current

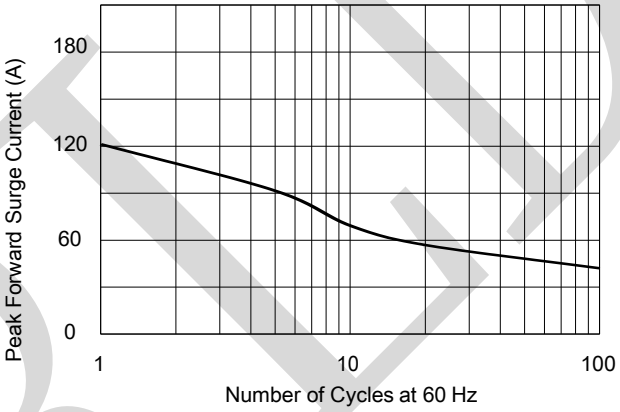

FIG.3-Typical Forward Voltage

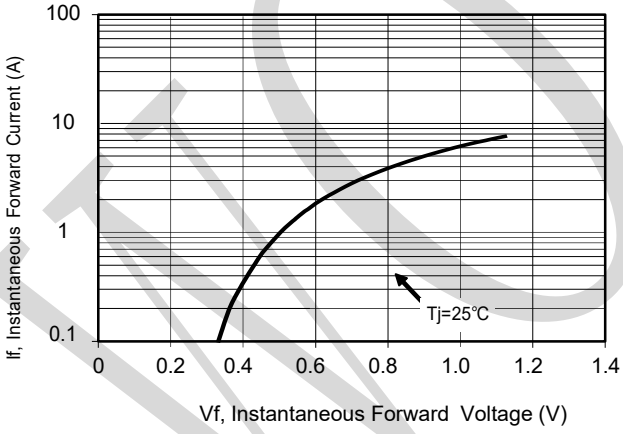

FIG.4-Typical Reverse Current

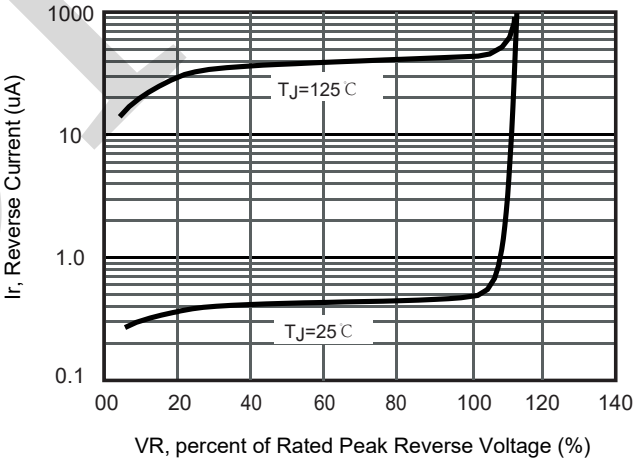

WORD

Package Outline Dimensions

Note:unit In(mm)

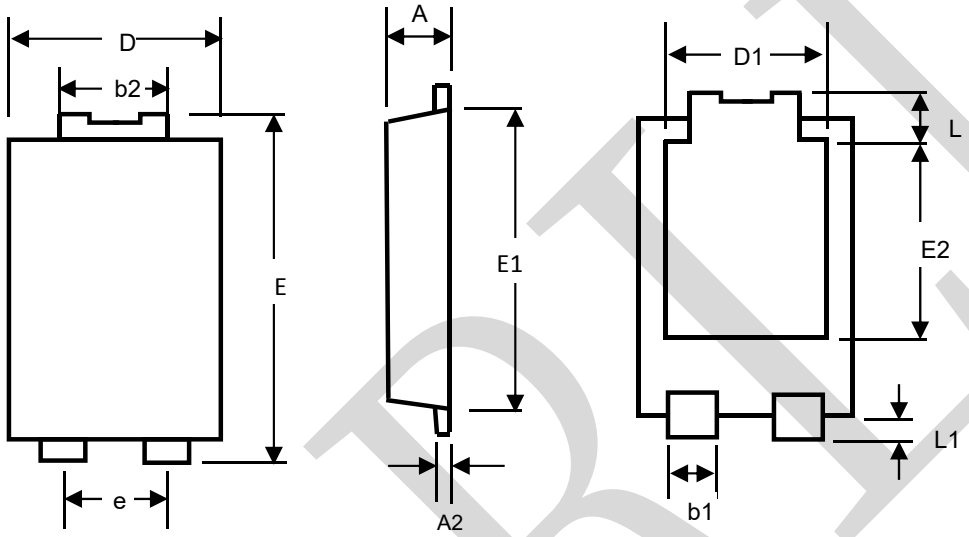

TO-277 mechanical data

UNIT		A	A2	b1	b2	D	D1	e	E	E1	E2	L	L1
mm	max	1.3	0.4	1.0	1.9	4.5	3.4	2.0	6.6	5.8	3.9	1.0	0.8
	min	1.0	0.2	0.8	1.7	3.9	3.0	1.8	6.4	5.4	3.4	0.6	0.4

TO-277 Suggested Pad Layout

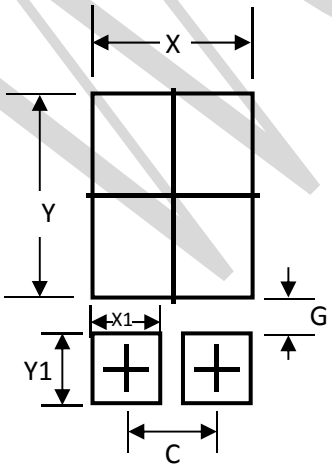

UNIT		C	G	X	X1	Y	Y1
mm	min	1.80	0.90	3.4	1.4	4.9	1.4

Marking Information

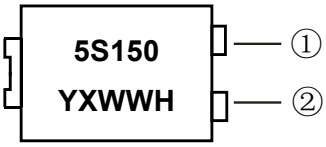

①Product model : TSP5S150SP Referred to as 5S150

②PDC information：

Y X WW H

H:Halogen-free

WW:Week code(01 to 53)

X:Internal identification code

Y:Year code(ex:0=2020)

Packaging Information

1.Reel Dimensions

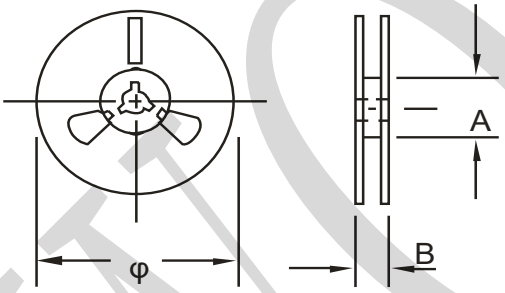

2.Inside Box

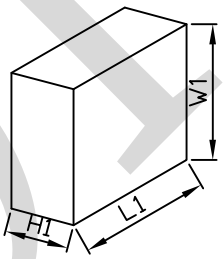

3.Outside Box

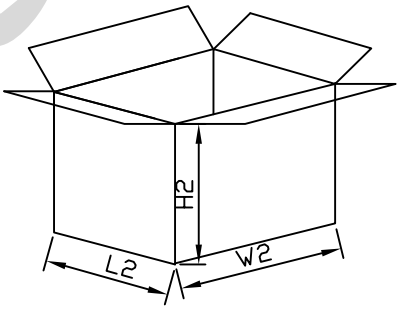

Packaging Information

NO	UNIT	Tube Dimensions			Inside Box			Outside Box		
Size	mm	φ	A	B	L1	W1	H1	L2	W2	H2
		330	70	15	335	335	43	360	360	360
QTY	PCS	Smallest package, 5,000PCS/reel			10,000PCS,2 reel in total			80,000PCS/carton,8 boxes in total		
Note	Tolerance	≤20mm,±3mm;			21-100mm,±5mm;			101-500mm,±10mm		

Revision Histor			
Date	Revision	Description & changes	Author
2015.08.23	1.0	Initial version	Sun
2017.11.23	1.1	Add printed characters	Sun
2022.11.09	1.2	Parameter update	Sun
2026.07.01	1.3	Version updating	Tang

WORLD